* 0000800000001 *

Cambridge Assessment International Education

Cambridge IGCSE™

CANDIDATE NAME	

CENTRE NUMBER						CANDIDATE NUMBER				

* 7 1 5 4 6 5 2 8 6 9 *

DESIGN & TECHNOLOGY **0445/43**

Paper 4 Systems & Control **October/November 2024**

1 hour

You must answer on the question paper.

No additional materials are needed.

INSTRUCTIONS

- Section A: answer **all** questions.
- Section B: answer **one** question.
- Use a black or dark blue pen. You may use an HB pencil for any diagrams or graphs.
- Write your name, centre number and candidate number in the boxes at the top of the page.
- Answer in the space provided.
- Do **not** use an erasable pen or correction fluid.
- Do **not** write on any bar codes.
- You may use a calculator.

INFORMATION

- The total mark for this paper is 50.
- The number of marks for each question or part question is shown in brackets [ ].
- All dimensions are in millimetres unless otherwise stated.

This document has **20** pages. Any blank pages are indicated.

DC (LO) 345911
© UCLES 2024

Section A

Answer **all** questions in this section.

1 Fig. 1.1 shows a wooden door frame ready to be placed in a building.

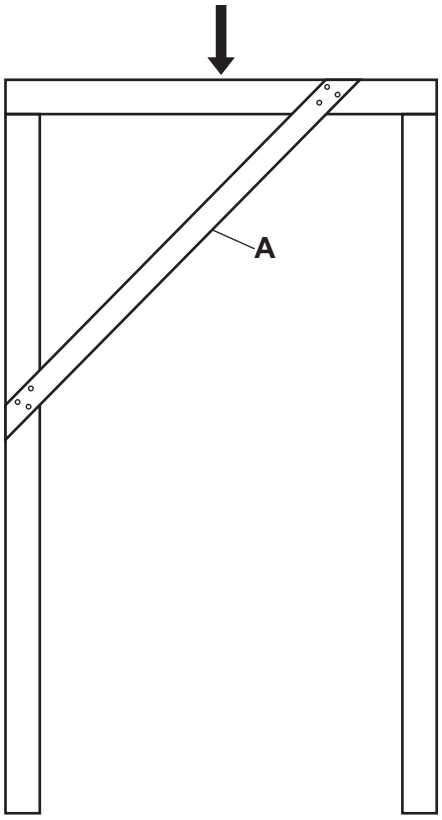

Fig. 1.1

(a) Use words from the list to complete the description of the wooden door frame.

nails **glue** **triangulation** **flexible** **rigid**

Joints at each end of part **A** are temporary. They are made using .....

Part **A** uses ..... to ensure that the wooden door frame is

..... . [3]

(b) Name the force indicated by the arrow that will act on the wooden door frame when the building is complete.

..... [1]

DO NOT WRITE IN THIS MARGIN

2 Composite materials can be used in the construction of beams.

(a) Give **one** example of a composite material.

..... [1]

(b) State **two** benefits of using composite materials.

1 .....

2 .....
[2]

3 Give **two** reasons why products that can be disassembled are good for the environment.

1 .....

2 .....
[2]

4 Fig. 4.1 shows a car handbrake lever.

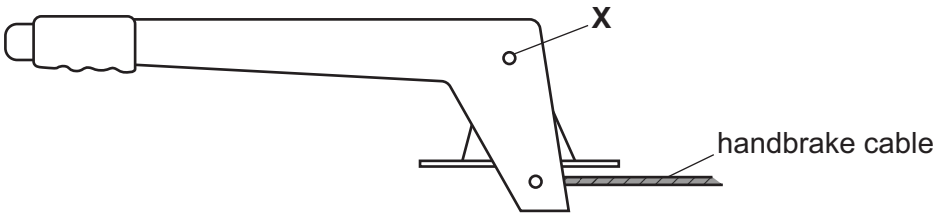

Fig. 4.1

(a) Describe how friction in the pivot at point **X** can be reduced.

.....

.....

..... [2]

(b) State why the handbrake lever is described as a first class lever.

..... [1]

(c) The handbrake lever converts oscillating motion to reciprocating motion.
Name the **two** other types of motion.

1 .....

2 .....
[2]

DO NOT WRITE IN THIS MARGIN

5 Give **two** reasons for choosing spur gears to drive a mechanism.

1 .....

2 .....
[2]

6 Fig. 6.1 shows two spur gears.

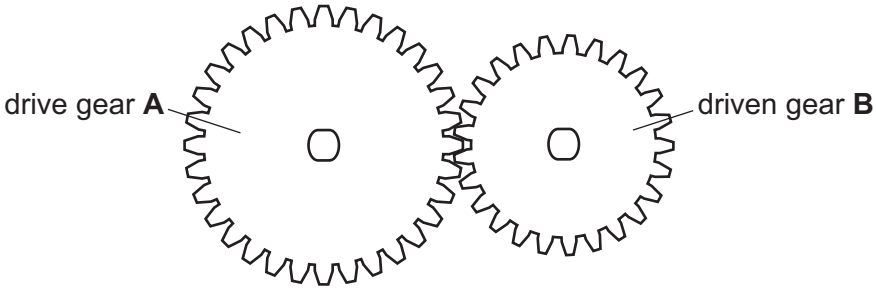

Fig. 6.1

State **two** effects of using the spur gears shown in Fig. 6.1.

1 .....

2 .....
[2]

DO NOT WRITE IN THIS MARGIN

7 Fig. 7.1 gives examples of electronic components and symbols.
Draw lines to connect the component name to the correct symbol.
One has been done for you.

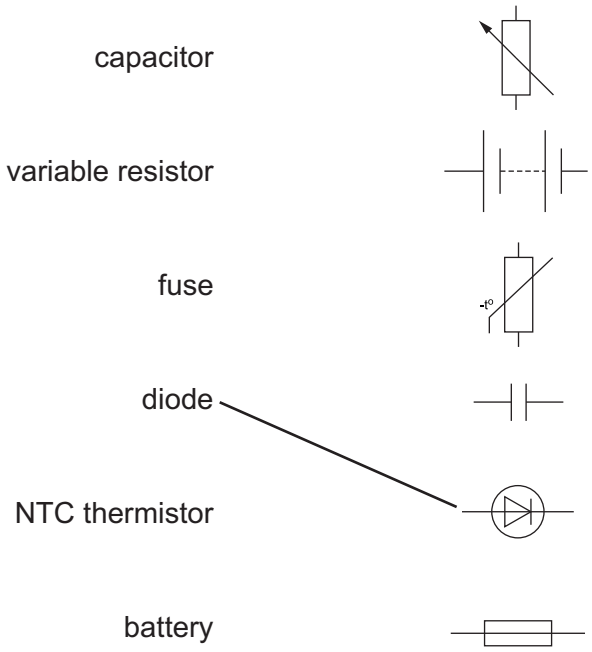

Fig. 7.1 [4]

8 A microswitch has three terminals marked C, NC and NO.
State the meaning of these letters.

C .....

NC .....

NO .....
[3]

DO NOT WRITE IN THIS MARGIN

Section B

Answer **one** question from this section.

9 Fig. 9.1 shows a building with scaffolding in position.

Fig. 9.1

(a) **(i)** Give **one** example of each type of manufactured structure that is visible in Fig. 9.1.

Frame structure .....

Mass Structure .....

Shell structure .....

[3]

DO NOT WRITE IN THIS MARGIN

(ii) Describe how movement in the scaffolding has been prevented.

.....

.....

..... [2]

(iii) Give **one** reason for using the wooden boards marked **A**.

..... [1]

(iv) Describe **two** safety features that can be seen in the construction of the scaffolding.

1 .....

2 .....
[2]

(b) Fig. 9.2 shows a road bridge with a concrete beam supported by columns.

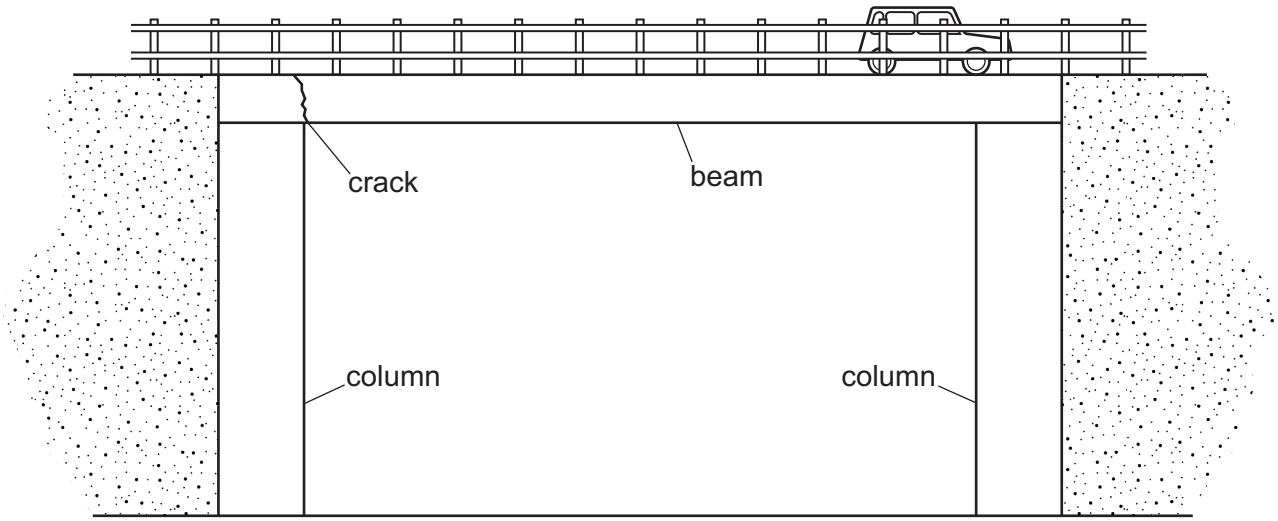

Fig. 9.2

(i) State the force that is the likely cause of the cracking on the concrete beam.

..... [1]

(ii) Add arrows to Fig. 9.2 to show the force acting on the beam. [1]

DO NOT WRITE IN THIS MARGIN

(iii) Explain how small cracks in structural concrete can cause more serious damage over several years.

.....

.....

.....

..... [3]

(iv) Fig. 9.3 shows two beams used to span a gap with a central support.
Each beam weighs 200 kg. The load from the beams is equally divided between the supports.

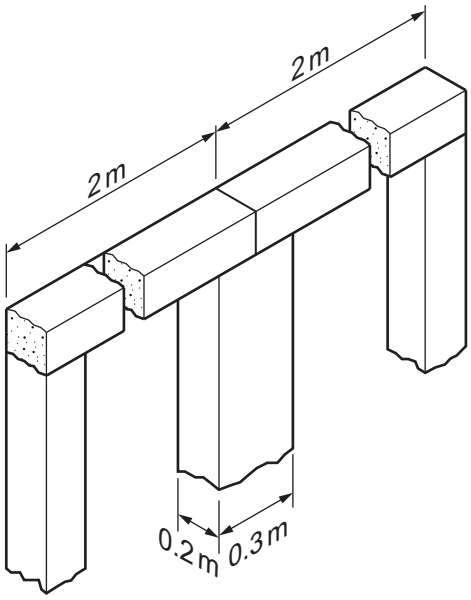

Fig. 9.3

Calculate the stress in the central support.
1 kg = 9.81 N

Use the formula $\text{stress} = \dfrac{\text{force}}{\text{cross sectional area}}$

Include the correct units in your answer.

.....

.....

.....

..... [4]

DO NOT WRITE IN THIS MARGIN

(c) Use sketches and notes to show the following structures:

(i) A shelf supported at each end by struts.

[2]

(ii) A shelf supported at each end by ties.

[2]

DO NOT WRITE IN THIS MARGIN

(iii) Fig. 9.4 shows a softwood shelf with a bend along its length caused by excessive load in the centre.

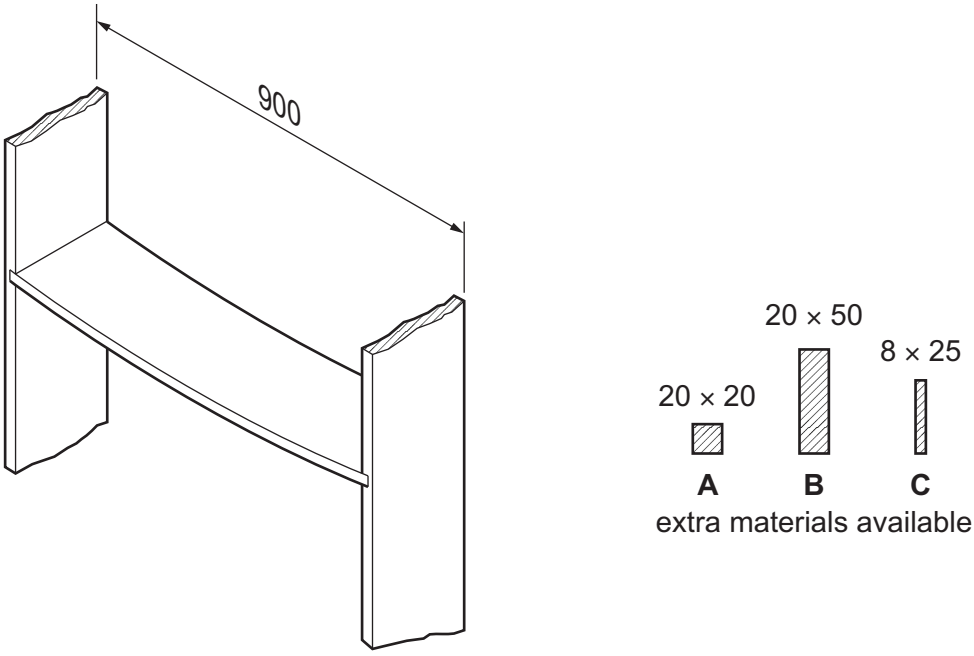

Fig. 9.4

Use sketches and notes to show a method of supporting the shelf to remove the bend. Include details of how any extra materials used are fixed in place.

[4]

DO NOT WRITE IN THIS MARGIN

10 **(a)** Fig. 10.1 shows a mechanism used to raise or lower a gate on a waterway.

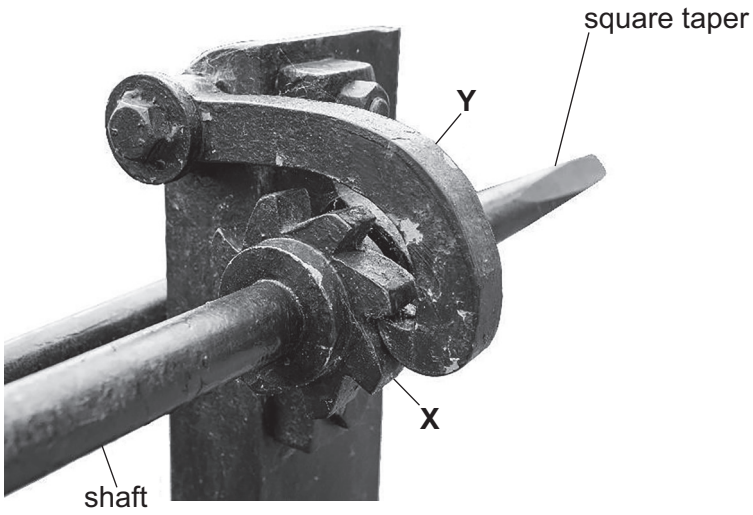

Fig. 10.1

(i) State the names of parts **X** and **Y** that are used in the mechanism.

X .....

Y .....
[2]

(ii) Describe how the mechanism in Fig. 10.1 controls rotation of the shaft.

.....

.....

.....

..... [3]

DO NOT WRITE IN THIS MARGIN

(iii) Fig. 10.2 shows a cranked handle that can be fitted to the square taper on the end of the shaft allowing the shaft to be turned.

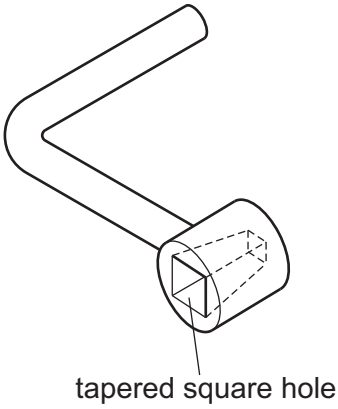

Fig. 10.2

Give **one** benefit of using this method of fitting the handle.

.....

..... [1]

(iv) Explain what is meant by mechanical advantage in a mechanism.

.....

.....

.....

..... [2]

(v) Use sketches and notes to show how the mechanical advantage and efficiency of the cranked handle in Fig. 10.2 could be increased.

[3]

DO NOT WRITE IN THIS MARGIN

(b) Fig. 10.3 shows a small circular saw and the method used to mount the motor.

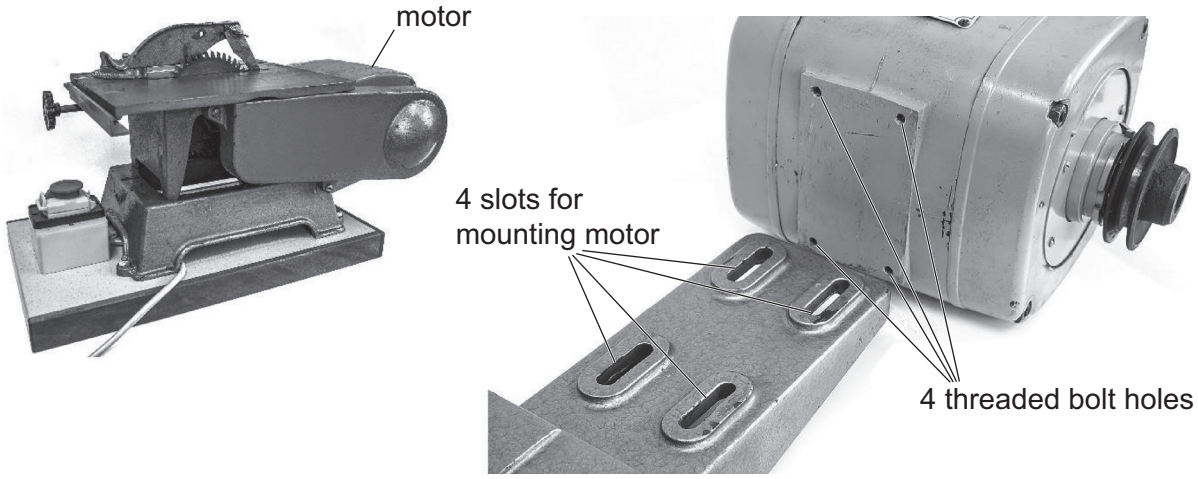

Fig. 10.3

(i) Give **two** reasons for using four slots to mount the motor.

1 .....

.....

2 .....

.....
[2]

(ii) Use sketches and notes to show how the vee belt used to drive the circular saw can be tensioned.

[2]

DO NOT WRITE IN THIS MARGIN

(iii) Fig. 10.4 shows the belt and pulley arrangement between the motor and the saw blade.

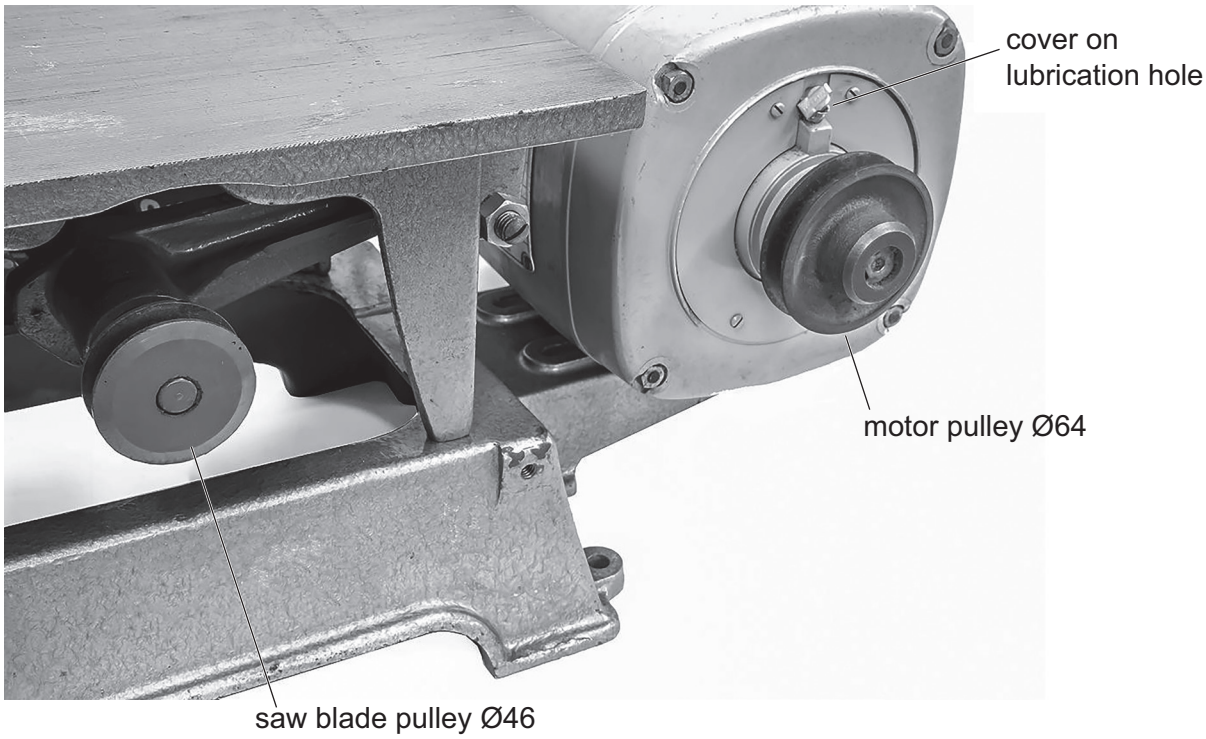

Fig. 10.4

The motor has a rotational speed of 2850 rpm when not under load.
Calculate the rotational speed of the saw blade when the motor is switched on.

.....

.....

.....

..... [3]

(iv) Explain why the actual rotational speed in use may be less than the calculated speed.

.....

.....

..... [2]

(v) Give **one** reason for having covers over the lubrication holes at each end of the motor.

.....

..... [1]

DO NOT WRITE IN THIS MARGIN

(c) **(i)** State what is meant by a plain bearing.

.....

..... [1]

(ii) Fig. 10.5 shows a tapered roller bearing with a section showing a wheel hub and axle that uses tapered roller bearings.

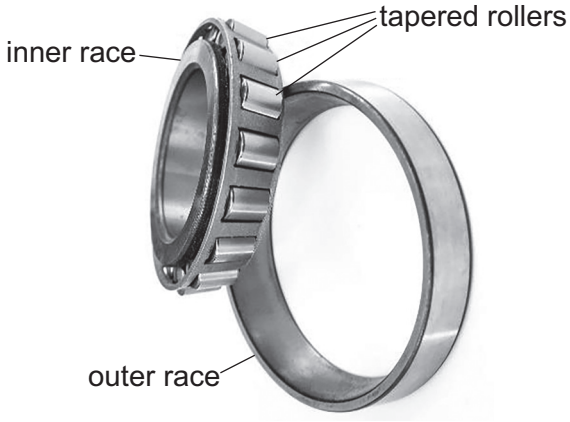

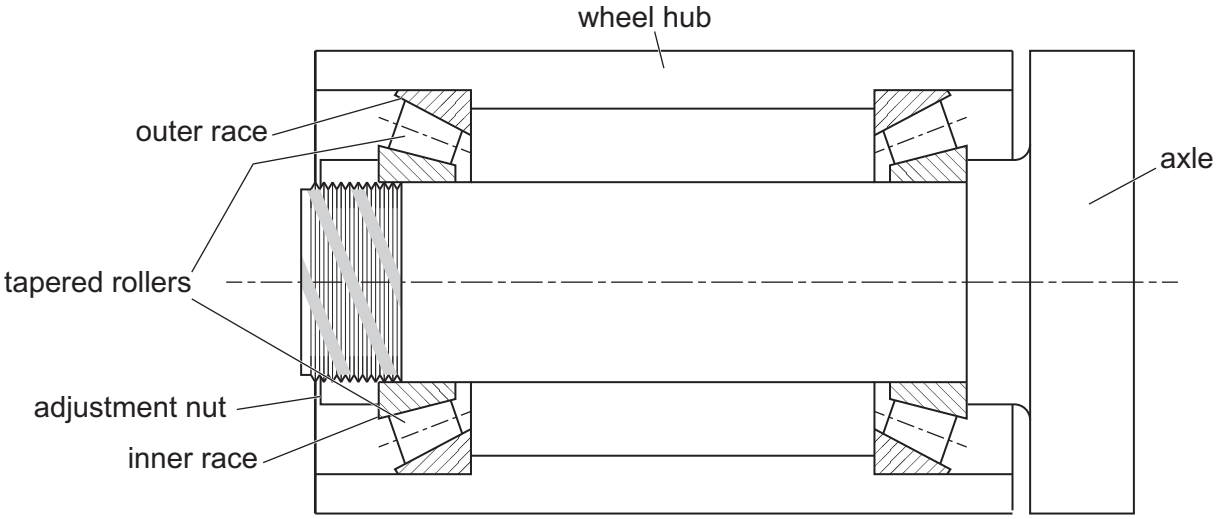

Fig. 10.5

Explain why tapered roller bearings are used in pairs with the tapered ends of the rollers facing each other on the axle.

.....

.....

.....

..... [3]

DO NOT WRITE IN THIS MARGIN

11 Fig. 11.1 shows two possible designs for a printed circuit board (PCB) to be made using the photoetch process.

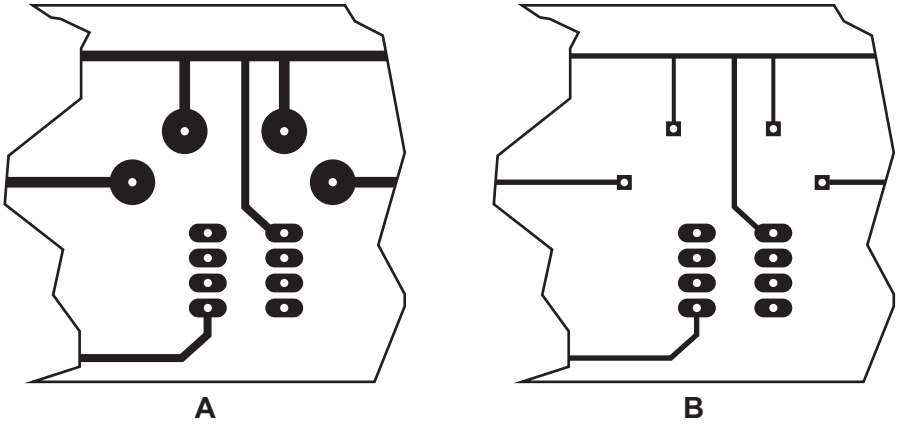

Fig. 11.1

(a) **(i)** Give one reason why design **A** is better than design **B**.

..... [1]

(ii) State **one** hazard and **one** health and safety measure that should be in place when using the photoetch process to construct a PCB.

Hazard .....

.....

Health and safety measure .....

.....
[2]

(b) Fig. 11.2 shows two signals from a 555 timer IC circuit.

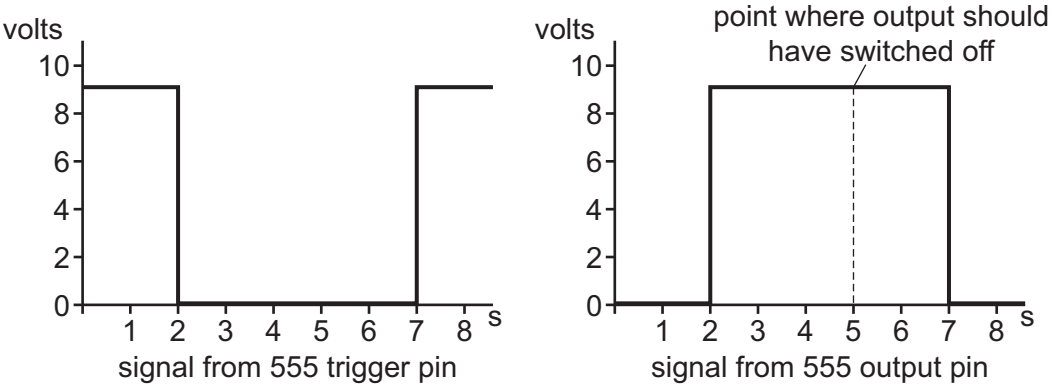

Fig. 11.2

(i) From the list below circle the type of circuit that will produce the signal from the 555 output pin in Fig. 11.2.

astable **bistable** **amplifier** **monostable** **switch** [1]

DO NOT WRITE IN THIS MARGIN

(ii) Describe the signal from the 555 trigger pin shown in Fig. 11.2.

.....

.....

..... [2]

(iii) The output signal is designed to be 3 seconds long.
Calculate the resistor value that is required to produce a 3 second time delay if a 100 μF capacitor is used in the circuit.

Use the formula $t = 1.1\ R\ C$

.....

.....

.....

..... [3]

(iv) Explain why the output pulse in Fig. 11.2 has continued beyond the point where it should have switched off.

.....

.....

..... [2]

(v) When building a test circuit the 100 μF capacitor is not available and is replaced by two 47 μF capacitors connected in parallel to give a value of 94 μF.
Draw the circuit symbols to show two electrolytic capacitors connected in parallel.

[2]

(vi) Explain why the difference between 94 μF and 100 μF is not important.

.....

.....

.....

..... [2]

DO NOT WRITE IN THIS MARGIN

(c) Fig. 11.3 shows a block diagram of a heating system and the truth table for the system. For the heater to switch on, the clock must be at logic 1 and the thermostat at logic 0.

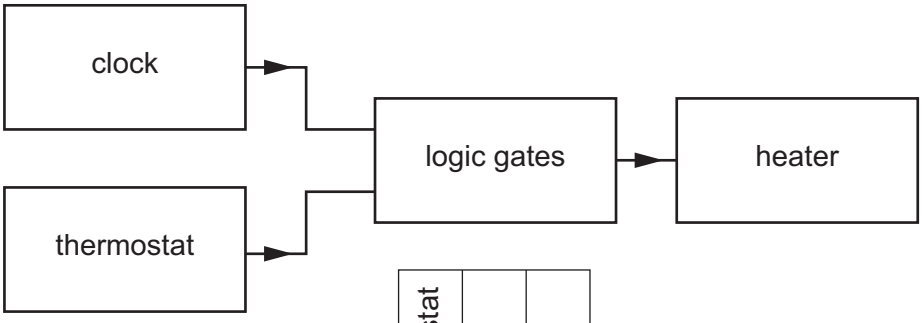

thermostat	clock	heater
0	0	0
0	1	1
1	0	0
1	1	0

Fig. 11.3

(i) Use logic gate symbols to show how the circuit could be constructed using only NAND gates.

[3]

DO NOT WRITE IN THIS MARGIN

(ii) State why NAND gates and NOR gates are known as universal gates.

.....

..... [1]

(iii) Fig. 11.4 shows the outline of a 14 pin IC.

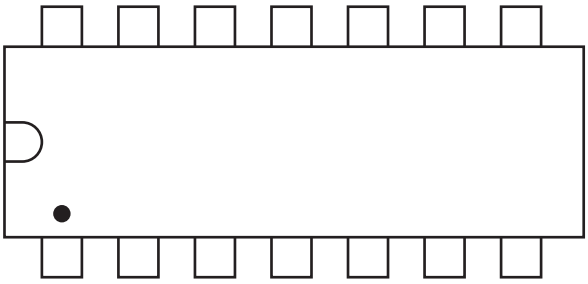

Fig. 11.4

Add pin numbers to pins 5 and 10. [2]

(iv) Fig. 11.5 shows an incomplete circuit diagram of the signal from the logic system and a relay that is used to switch on the heater.

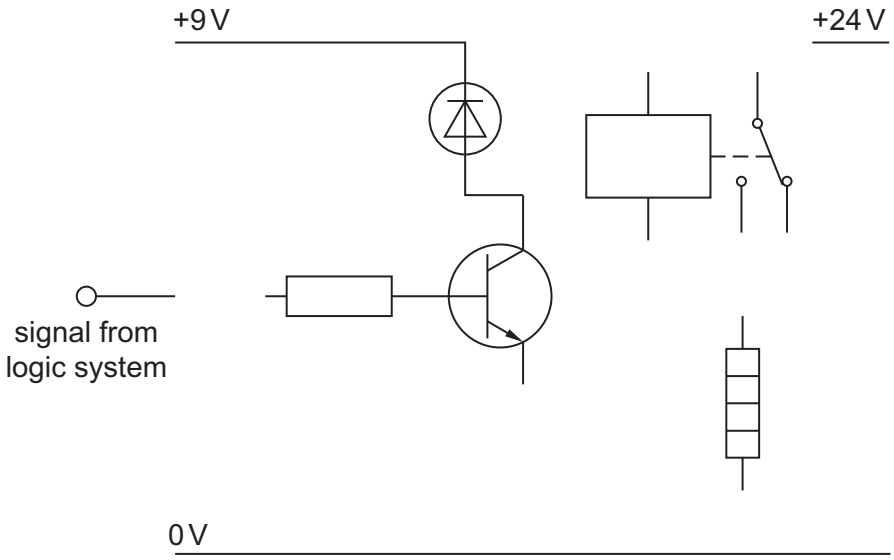

Fig. 11.5

Complete Fig. 11.5 to show connections for the:

- signal from the logic system to the transistor
- transistor emitter to 0 V
- relay coil
- relay outputs and the heater.

[4]

DO NOT WRITE IN THIS MARGIN

BLANK PAGE

Permission to reproduce items where third-party owned material protected by copyright is included has been sought and cleared where possible. Every reasonable effort has been made by the publisher (UCLES) to trace copyright holders, but if any items requiring clearance have unwittingly been included, the publisher will be pleased to make amends at the earliest possible opportunity.

To avoid the issue of disclosure of answer-related information to candidates, all copyright acknowledgements are reproduced online in the Cambridge Assessment International Education Copyright Acknowledgements Booklet. This is produced for each series of examinations and is freely available to download at www.cambridgeinternational.org after the live examination series.

Cambridge Assessment International Education is part of Cambridge Assessment. Cambridge Assessment is the brand name of the University of Cambridge Local Examinations Syndicate (UCLES), which is a department of the University of Cambridge.

© UCLES 2024

DO NOT WRITE IN THIS MARGIN